FT930-65

CYCLING CAPACITY	
20 Hour Rate	**75 Amp Hours**

RESERVE CAPACITY			
Reserve @25 AMPS	**168 Minutes**	Reserve @75 AMPS	**43.7 Minutes**

ELECTRICAL SPECIFICATIONS

Nominal Voltage	**12 Volt**
C100	**82 AH**
C20	**75 AH**
C5	**60 AH**
Short Circuit Current	**4000 Amps**
CCA	**930 Amps**
CA or MCA	**1070 Amps**
PHCA	**1750 Amps**
Internal Resistance	**3.1 mΩ**

MECHANICAL SPECIFICATIONS

Group Size	**65**	
Terminal Type	**M8 + TP28 (SAE)**	
Terminal Torque	**See reverse side**	
Height (w/ terminal)	**7.24"**	**184 mm**
Height (case only)	**6.65"**	**169 mm**
Width	**7.17"**	**182 mm**
Length	**11.81"**	**300 mm**
Weight	**54.9 lbs**	**24.5 kg**
Case Type	**ABS Plastic -** Flame Res. Rating UL94-HB	

DISCHARGE TABLE (Constant Current)

Time	Amps	Rate
20hr	3.8	0.05 CA
10hr	6.8	0.10 CA
8hr	8.2	0.13 CA
5hr	12.0	0.20 CA
3hr	18.5	0.33 CA
2hr	25.1	0.50 CA
1hr	53.5	1.00 CA

DISCHARGE PROFILE (Constant Current)

12-Volt Battery *Temperature: 77°F (25°C)*

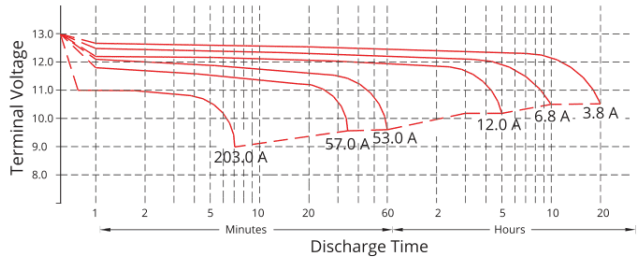

- All listed ratings are @ 100% SoC, T=77°F (25°C), 1.75VPC unless otherwise specified.
- Specifications listed are for estimation purposes only. Battery performance can vary depending on application. Battery design subject to change.

BATTERY & TERMINAL DIMENSIONS (All units shown in mm)

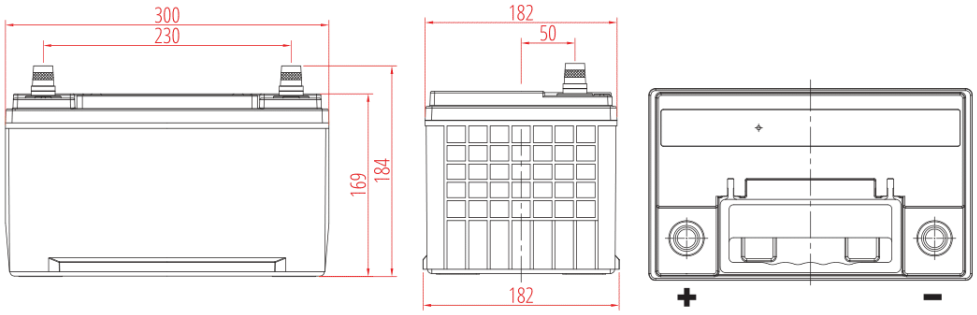

Terminal: M8 + TP28

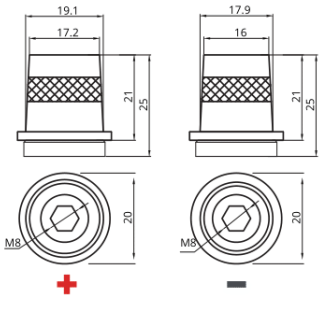

FULL THROTTLE SERIES | FULL THROTTLE AGM

DRAKE Marine International Ltd

TEMPERATURE vs CAPACITY

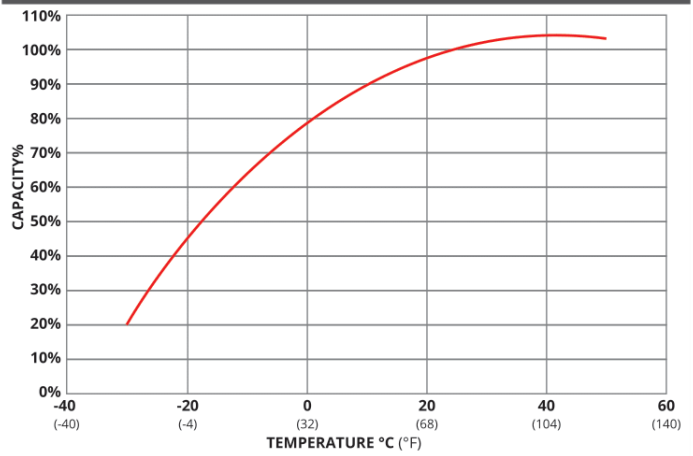

STATE of CHARGE (SOC) vs OPEN CIRCUIT VOLTAGE (OCV)

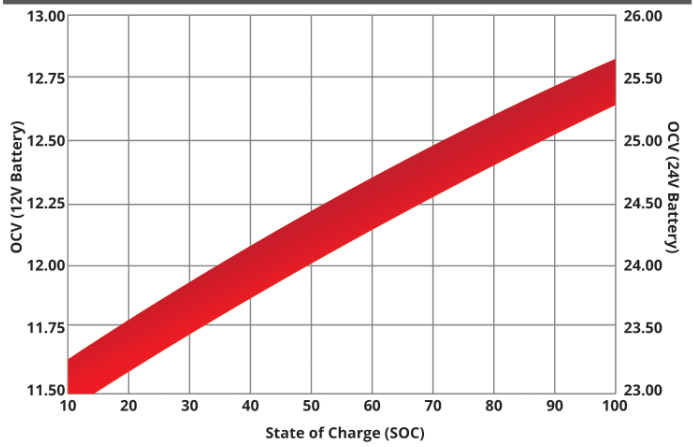

CYCLE LIFE vs DEPTH of DISCHARGE (DOD) *(Based on BCI Testing @ 2-hr Rate)

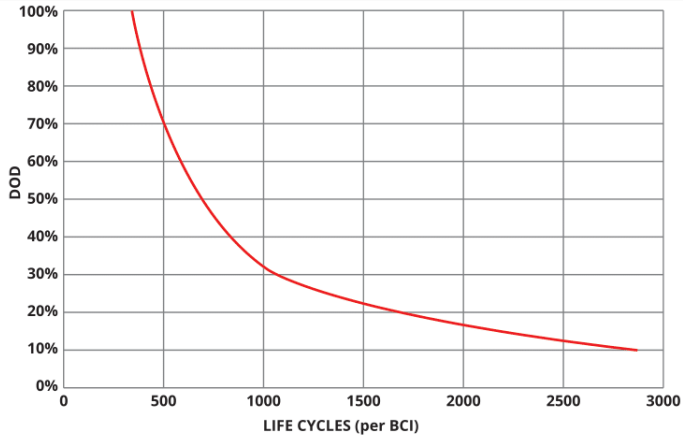

SELF DISCHARGE vs TIME/TEMPERATURE

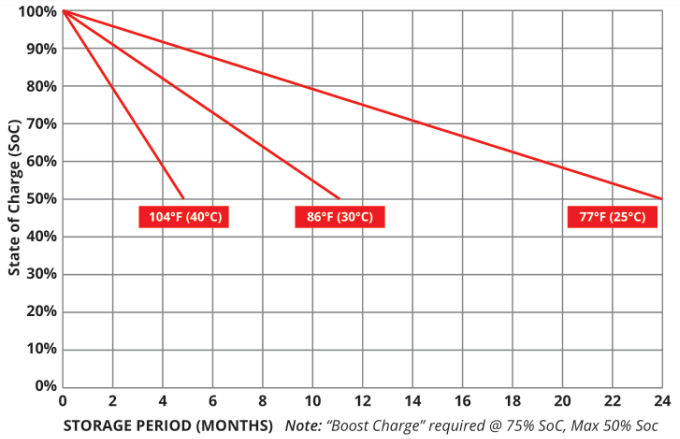

Note: "Boost Charge" required @ 75% SoC, Max 50% Soc

TEMPERATURE RANGE SPECIFICATIONS

Condition	Recommended	Maximum	Recommended	Maximum
Storage	5°F to 122°F	-40°F to 160°F	-15°C to 50°C	-40°C to 71°C
Operation	5°F to 104°F	-40°F to 160°F	-15°C to 40°C	-40°C to 71°C
Charge with TC	5°F to 122°F	-40°F to 160°F	-15°C to 50°C	-40°C to 71°C
Charge w/o TC	32°F to 104°F	5°F to 122°F	0°C to 40°C	-15°C to 50°C

***TC**= Temperature Compensation*

CHARGE VOLTAGES

	Battery Voltages			
Charge Stage	**12V**	**24V**	**36V**	**48V**
Bulk	14.4 - 14.7V	28.8 - 29.4V	43.2 - 44.1V	57.6 - 58.8V
Absorption	14.4 - 14.7V	28.8 - 29.4V	43.2 - 44.1V	57.6 - 58.8V
Float	13.6V	27.2V	40.8V	54.6V
TC Factor: (-2mV°F/cell) or (-4mV°C/cell)				

TERMINAL TORQUE SPECS (applicable values are highlighted)

M6	M8	M10	M6M (Stud)	M8M (Stud)	M10M(Stud) & 3/8" Stud	FR45	TP06 (AP)	TP08/TP68 (AP)	AP
3.3-4.8ft-lbs	5.2-6.7ft-lbs	8.1-10.3ft-lbs	2.6-3.7ft-lbs	4.4-5.9ft-lbs	7.4-8.8ft-lbs	4.8-6.3ft-lbs	2.6-3.3ft-lbs	4.6-6.3ft-lbs	4.2-5.8ft-lbs
40-57.5lbs-in	62-80lbs-in	97-124lbs-in	31-44lbs-in	53-71lbs-in	88.5-106lbs-in	57-75lbs-in	31-40lbs-in	55-75lbs-in	50-70lbs-in
4.5-6.5Nm	7-9Nm	11-14Nm	3.5-5Nm	6-8Nm	10-12Nm	6.5-8.5Nm	3.5-4.5Nm	6.2-8.5Nm	5.6-7.9Nm

ISO CERTIFIED

9001:2008 Quality Management System
14001:2004 Environmental Management System
18001:2007 Occupational Health & Safety Management System

TPPL TECHNOLOGY

DELIVERY APPROVED!
LAND, SEA & AIR

Fullriver batteries are sealed lead acid batteries made with Absorbed Glass Mat (AGM) technology. The electrolyte is absorbed into the fiberglass separator material rather than in a free-flowing liquid form. Fullriver batteries are non-spillable electric storage batteries. They are excepted from the requirements of DOT's hazardous materials regulations, since they adhere to the requirements of code 49 CFR Section 173.159(D) - **(CLASSIFIED APPROVED: DOT, CFR, HMR49, IATA, ICAO67, IMDG27)**